M0DGQ

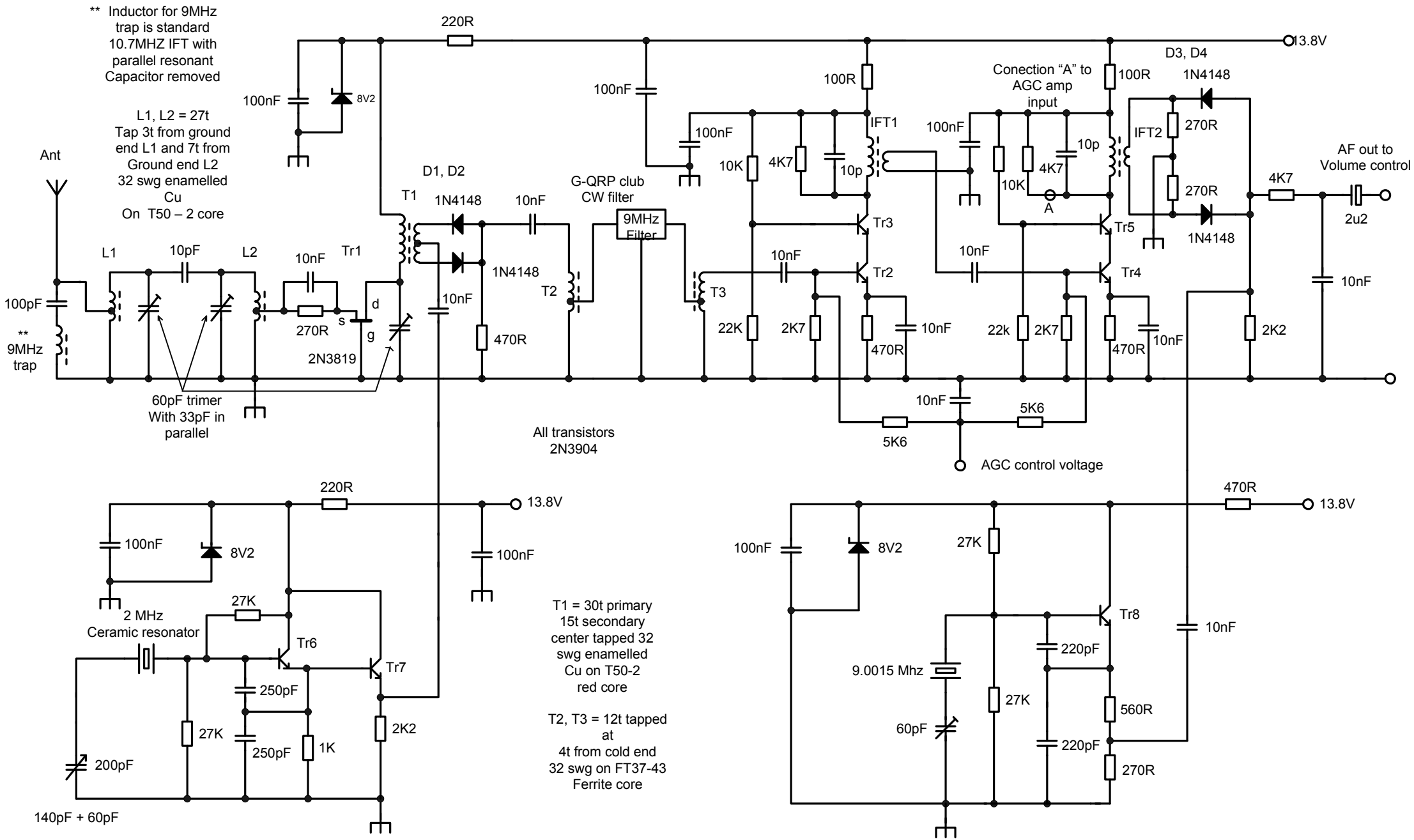
** Inductor for 9MHz trap is standard 10.7MHZ IFT with parallel resonant Capacitor removed
L1, L2 = 27t
Tap 3t from ground end L1 and 7t from Ground end L2
32 swg enamelled Cu
On T50 – 2 core
Ant
100pF
** 9MHz trap
L1
10pF
L2
10nF
Tr1
270R
s
d
g
2N3819
60pF trimer With 33pF in parallel
100nF
8V2
220R
13.8V
D1, D2
1N4148
T1
10nF
1N4148
470R
10nF
T2
G-QRP club CW filter
9MHz Filter
T3
100nF
100R
IFT1
10K
4K7
10p
Tr3
Tr2
10nF
22K
2K7
470R
10nF
5K6
5K6
10nF
AGC control voltage
All transistors 2N3904
Conection "A" to AGC amp input
100nF
10K
4K7
10p
A
Tr5
Tr4
10nF
22k
2K7
470R
10nF
100R
D3, D4
1N4148
IFT2
270R
270R
1N4148
4K7
AF out to Volume control
2u2
10nF
2K2
220R
13.8V
100nF
8V2
100nF
2 MHz Ceramic resonator
27K
Tr6
Tr7
250pF
27K
250pF
1K
2K2
200pF
140pF + 60pF
T1 = 30t primary
15t secondary
center tapped 32 swg enamelled Cu on T50-2 red core
T2, T3 = 12t tapped at 4t from cold end
32 swg on FT37-43 Ferrite core
470R
13.8V
100nF
8V2
27K
Tr8
10nF
220pF
9.0015 Mhz
27K
560R
60pF
220pF
270R